Pulse Repeater v3 PLR255

DESCRIPTION

Note: Version 3 has a trim pot to adjust the output level instead of a test socket. APCS recommends using the PLS257 instead of the PLR255. The PLS257 has different connections to the PLR255 but features two outputs and four way isolation.

The PLR255 is for applications where a pulse isolation is required. The input pulse is re-powered and repeated up to a maximum frequency of 10kHz. The output pulse width is adjustable (SPAN) to provide "pulse stretching" where the input pulse is very short. Input signals of various types or from a variety of sensors can be accommodated:

1) **Low level AC**, sine waves as produced by coil-type pick up (min 200mVpp).
2) **Low level AC**, any wave shape having a consistent frequency pattern (200mVpp up to 20Vpp).
3) **DC pulse**, (200mVpp up to 50Vpp).
4) **NAMUR proximity sensor or pulsing contact** - the sensor is directly connected to the PLR155 as the module provides the 8Vdc auxiliary supply.
5) **All types of 3-wire proximity sensors**, optical sensors or any devices with NPN/PNP open collector transistor output requiring 5-30Vdc auxiliary supply at 20mA maximum.

A pulse with a DC offset can also be accommodated by adjusting the 'ZERO' (trigger) adjustment. The output pulse amplitude is adjustable via the 15-turn internal potentiometer that allows exact pulse voltage levels to be set. The module output is indicated by a front mounted L.E.D. which provides clear indication of module function and frequency output. The PLR255 provides galvanic isolation up to 1500Vdc between input and the combined output and supply circuitry. RF and power transient protections are standard as it is with all A.P.C.S. modules. Power supply variations from 63Vdc down to 12Vdc are available.

General Specifications

Size:	23.5W x 71.5H x 109D (mm).
Material:	ABS.
Mounting:	DIN-Rail, gear plate.
Termination:	Top mounted screw terminals.
Protection class:	IP40 (IP65 Enclosure Opt)
Weight:	0.120 kg.
Housing material:	Polycarbonate.
Operating temperature:	-10 - 50°C.
Frequency range:	Up to 10kHz Up to 50kHz for pulse follower.
Input/Output isolation:	2kV rms.
Output transistor rating:	30V, 100mA.
Output Pulse Drive:	20mA maximum
Minimum Input Pulse Width:	10µs.
Output Pulse Width:	Adjustable 50µs...500ms
Output Pulse Level:	Supply -2.5V maximum.

Electromagnetic compatibility: Complies with AS/NZS 4251.1 (EN 50081.1)

Block diagram

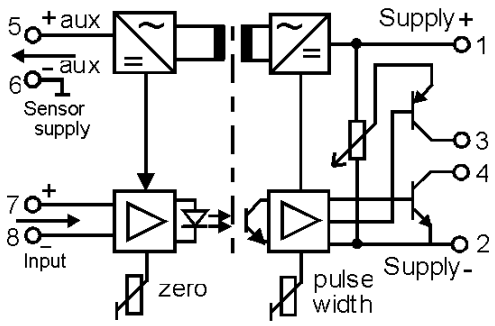

TYPICAL APPLICATIONS

1) **Pulse conditioning**, where the input signal is generated by a proximity or inductive sensor with low amplitude or sinusoidal wave shape.

2) **Pulse isolation**, where the input pulse is referenced to ground or has a high common mode or DC component.

3) **Pulse stretching** for applications, where the input pulse is too short to be registered by a PLC or any other receiving device. Often a combination of pulse division and stretching can provide the solution (example: high speed work piece counting - bottle conveyor).

4) **Pulse follower** for applications where pulse isolation or level amplification is required while maintaining mark/space relationship.

For input / output combinations refer to TYPE NO. DESIGNATION overleaf.

PLR255 - X X X X X

TYPE NO. DESIGNATION

Power Supply:

1 = 12Vdc ±20%
2 = 24Vdc ±20%
*) 9 = Other < 63Vdc (Specify).

Input:

Auxiliary Power (specify frequency & amplitude)
1 = Sine, sawtooth or pulse (0.2 - 50Vdc), 24Vdc auxiliary.
2 = 24Vdc pulse external source pulse (0.2 - 50Vdc), 24Vdc auxiliary.
3 = NAMUR proximity sensor or contact, 8Vdc auxiliary.
4 = 3-wire NPN proximity sensor 15Vdc auxiliary.
5 = 3-wire PNP proximity sensor 15Vdc auxiliary.
6 = 3-wire NPN proximity sensor 24Vdc auxiliary.
7 = 3-wire PNP proximity sensor 24Vdc auxiliary.
8 = 2-wire 24V DC/AC proximity sensor, 24Vdc auxiliary.
*) 9 = Other (Specify).

Output Pulse Width:

1 = Adjustable 50µS to 5mS (10kHz to 100Hz), specify.
2 = Adjustable 5mS to 500mS (100Hz to 1Hz), specify.
3 = Pulse follower (50kHz max, no test socket) .
*) 9 = Other (Specify)

Note:- $Max\ Input\ Frequency = \frac{0.5}{Pulse\ Witdth(Seconds)}$.

Output Pulse Level:

1 = 5V
2 = 1V up to (supply -2.5V) max, specify. (3V min for "Pulse Follower" option)
*) 9 = Other (Specify)

Options:

0 = None.
*) 1 = Frequency Division. $Output\ Frequency = \frac{Input\ Frequency}{n}$,
Specify 'n', n = 1 to 999 (or 1 to 99 for pulse follower option).
*) 9 = Other (Specify).

*) = Price Extra.

Front Control Explanation

1) Test socket
   v1, v2. - Input frequency referenced to terminal 6.
   v3 Adjust pulse amplitude.
2) Output indicator.
3) SPAN = Pulse Width adjustment
   (disabled on pulse follower option).
4) ZERO = Trigger level adjustment.

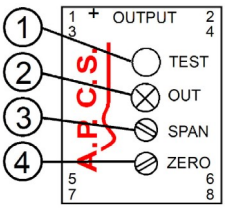

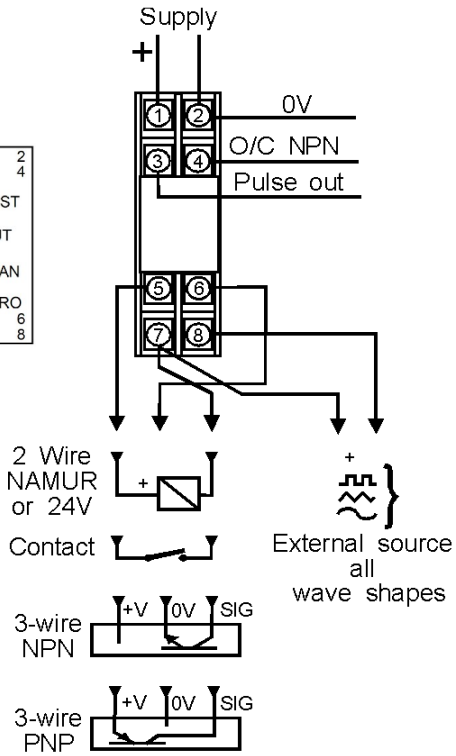

Output Circuit