Room Temperature Transmitter RTT508

DESCRIPTION

The ROOM TEMPERATURE TRANSMITTER RTT508 is designed for in-door temperature measurement offering an economical price/performance solution. The electronics are housed in an attractive but unobtrusive beige ABS case. The flow through design allows accurate response of the sensor. Installation is a simple 3-step process:

1. Mount backing plate to a vertical surface with rounded edge at to bottom.
2. Cable entry is through the rough the 10mm hole in the backing plate. If side entry is required then an additional hole may be drilled in the cover , do not use existing holes as they are required for correct operation.
3. All measurement electronics are mounted on the front cover that clips in place. The cover is removed by pulling on the left hand side.

GENERAL SPECIFICATIONS *1

Case material:	ABS
Size:	73W x 78H x 27D mm
Operating temperature:	0 - 70°C
Operating humidity:	0 - 95% RH
Ripple rejection:	57dB @ 50Hz
Response time still air, 0 - 50°C, 0 - 90% output change:	3.5 minutes
Self heating (still air):	0.1°C
Temperature effect:	< 0.002%
Accuracy:	±0.5% or ±1%
Non linearity:	< 0.15%
Electromagnetic compatibility:	Complies with AS/NZS 4251.1 (EN 50081.1) ✔

4-20mA 2-Wire Transmitter *1

Max. supply voltage:	40Vdc
Min. supply voltage:	6Vdc
Max. load:	$RL_{max} = \frac{V_{Supply} - 6\,V}{0.02}\,\Omega$
Supply voltage effect:	< 0.01%
Load effect (0 to max):	< 0.01%

3-Wire Transmitter (Voltage Output) *1

Max. supply voltage:	40Vdc
Min. supply voltage @ 50°C 10V output into > 10k load:	12V
Short circuit protection:	@ 24Vdc, Continuous (@ 40Vdc), 1 minute
Supply voltage effect:	< 0.01%
Load effect (10kΩ to 10MΩ):	< 0.01%

*1: All specifications are for 24Vdc supply and a temperature of 50°C unless specified

3-Wire Transmitter (Current Output) *1

Max. supply voltage:	30Vdc
Min. supply voltage:	6Vdc
Max. load @ 24Vdc supply:	1kΩ
Max. load @ 12Vdc supply:	400Ω
Load effect:	5uA /Ω

Connection Examples

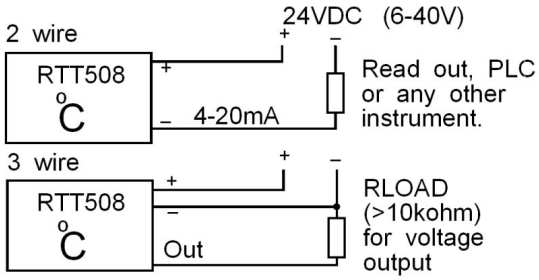

Installation

For best accuracy:

- Mount unit 1.5 to 2.0 metres from the floor.
- Avoid areas of direct sunlight; heat sources or poor ventilation.
- Ensure that the rounded surface is at the bottom.
- No not block the top sng bottom vent holes

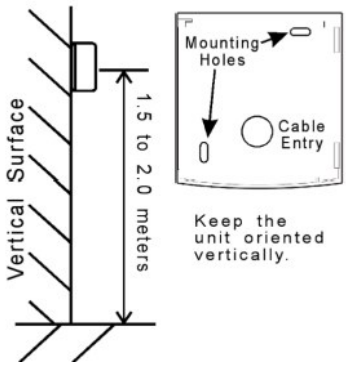

A.P.C.S.

RTT508 - X X X X

TYPE NO. DESIGNATION

Output:

1 = 4 - 20mA. } 2-Wire
2 = 10 - 50mA. } 2-Wire
3 = 0 - 1mA. } 3-Wire 0V Ref.
4 = 0 -10mA. } 3-Wire 0V Ref.
5 = 0 - 20mA. } 3-Wire 0V Ref.
6 = 0 - 1V. } 3-Wire 0V Ref.
7 = 0 - 5V. } 3-Wire 0V Ref.
8 = 0 - 10V. } 3-Wire 0V Ref.
*) 9 = Other (Specify).

Range:

1 = 0 – 50°C.
2 = 0 - 25°C.
*) 9 = Other (Specify).

Accuracy:

1 = ±1% (±0.5°C over 0 - 50°C).
*) 3 = ±0.5% (±0.25°C over 0 - 50°C).

Options:

0 = None.
*) 9 = Other (Specify).

*) = Price Extra.

Calibration Instructions

Connect the units as shown in the diagram below. For the 3-wire unit the output is measured between the supply negative (-) and (Out).

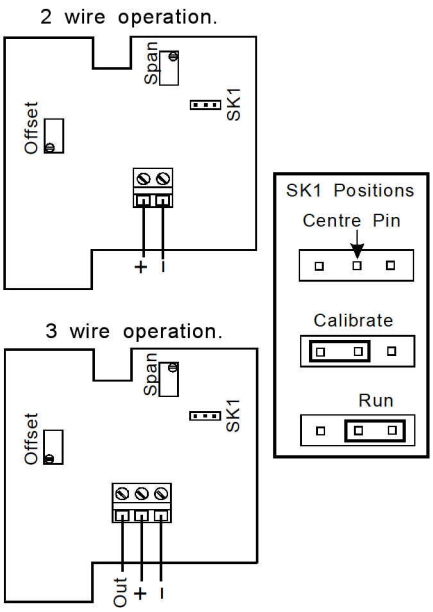

2-Wire Unit

1. Remove the programming plug and adjust "Offset" to 4mA.
2. Apply 500mV# between the "Centre pin" and the (-) terminal, and adjust "SPAN" for 20.00 mA.
3. Remove 500mV# and re-insert programming plug into the "Operate" position.

3-Wire Unit

1. Remove the programming plug and apply 50mV# between the "Centre pin" and the (-) terminal. Adjust "Offset" for 10% output (e.g. 1.00V for 0 - 10.00V span).
2. Apply 500mV# and adjust "SPAN" for 100% output (i.e. 10.00V for 10V range or 20.00mA for 20mA range etc).
3. Repeat steps (1) and (2) until desired accuracy is achieved.
4. Remove 500mV# and re-insert programming plug into the "Operate" position.

- # 500mV refers to 50°C full scale. For other input span calculate calibration voltage: mV = 0.01 x °C.
- For any configuration you can quickly verify sensor operation by gently blowing on it for several seconds and observing the output of the unit change.